Latches and Flip-Flops

Digital System Fundamentals

Sorayut Glomglome

Learning Outcome

- Use logic gates to construct basic latches.
- Recognize the difference between a latch and a flip-flop
- Explain how D and J-K flip-flops differ.
- Apply flip-flops in basic applications

CONTENTS

1. Latches

2. Flip-Flops

1. Latch

Latch

- The latch is a type of *temporary storage device* that has *two stable states (bistable)* and is normally placed in a category separate from that of flip-flops.
- Latches are similar to flip-flops because they are bistable devices that can reside in either of two states using a feedback arrangement, in which the outputs are connected back to the opposite inputs.
- The main difference between latches and flip-flops is in the method used for changing their state.

S-R Latch (SET-RESET Latch)

- A latch is a type of bistable logic device or multivibrator.
- An active-HIGH input S-R (SET-RESET) latch is formed with two cross-coupled NOR gates.
- An active-LOW input S-R latch is formed with two cross-coupled NAND gates.
- The output of each gate is connected to an input of the opposite gate.
- This produces the regenerative feedback that is characteristic of all latches and flip-flops.

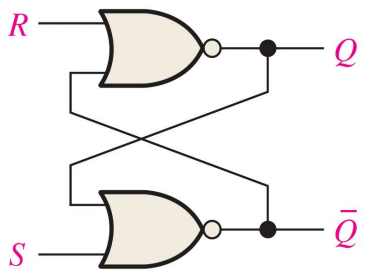

(a) Active-HIGH input S-R latch

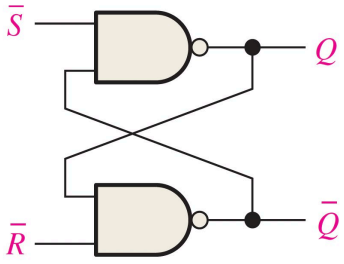

(b) Active-LOW input $\bar{S}$-$\bar{R}$ latch

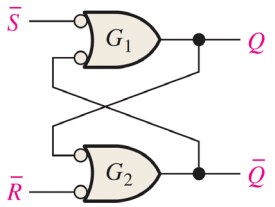

FIGURE 7–2 Negative-OR equivalent of the NAND gate $\bar{S}$-$\bar{R}$ latch in Figure 7–1(b).

$\overline{S} - \overline{R}$ Latch : SET Operation

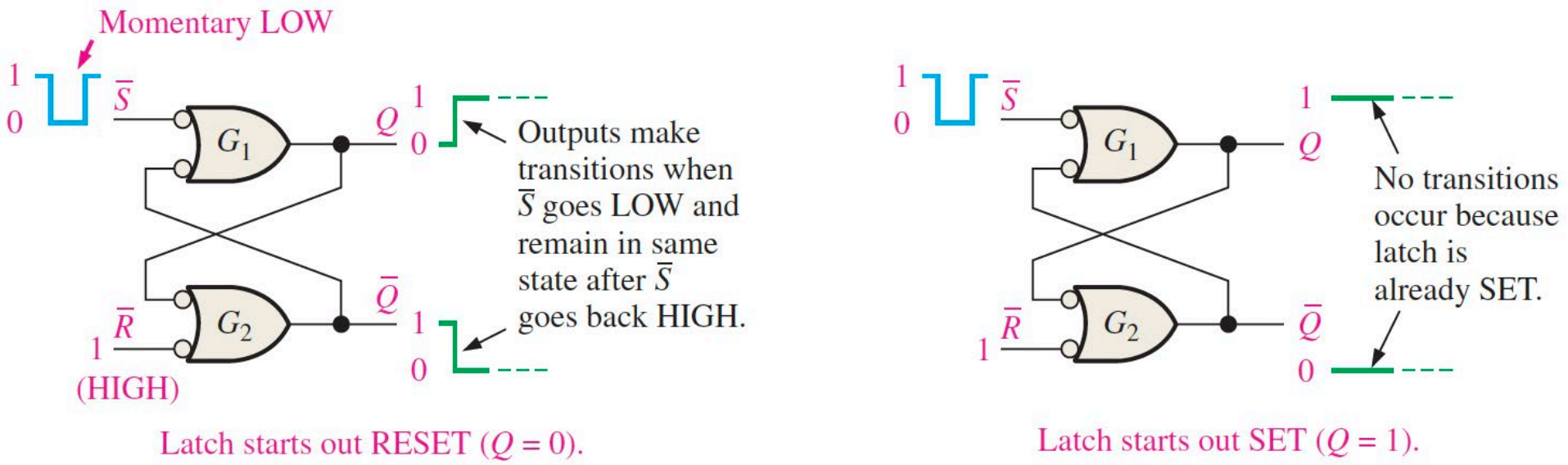

(a) Two possibilities for the SET operation

$\bar{S} - \bar{R}$ Latch : RESET Operation

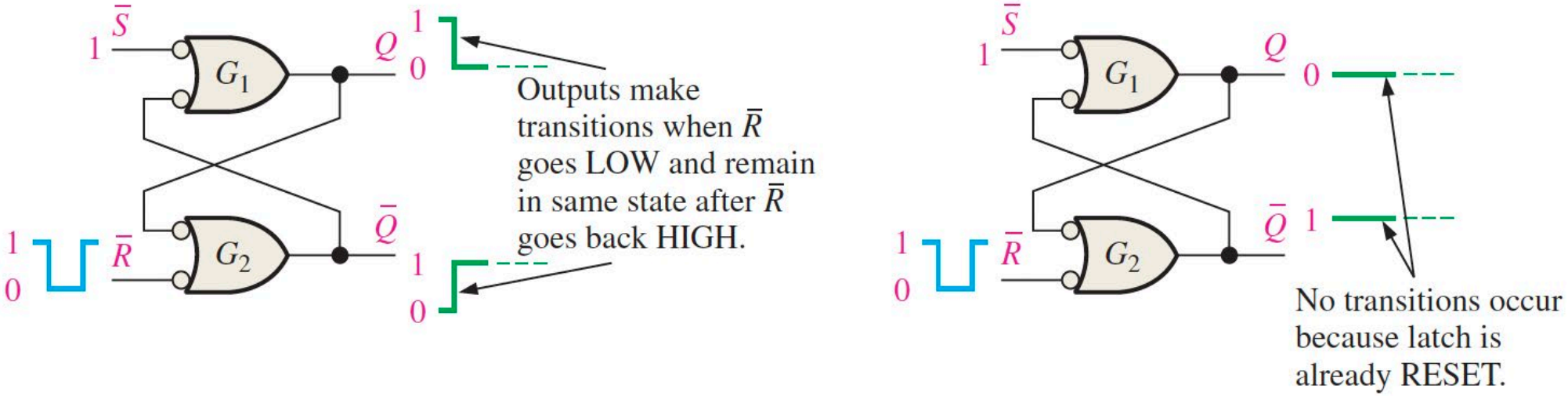

Latch starts out SET ($Q = 1$).

Latch starts out RESET ($Q = 0$).

(b) Two possibilities for the RESET operation

$\bar{S} - \bar{R}$ Latch : No Change Condition

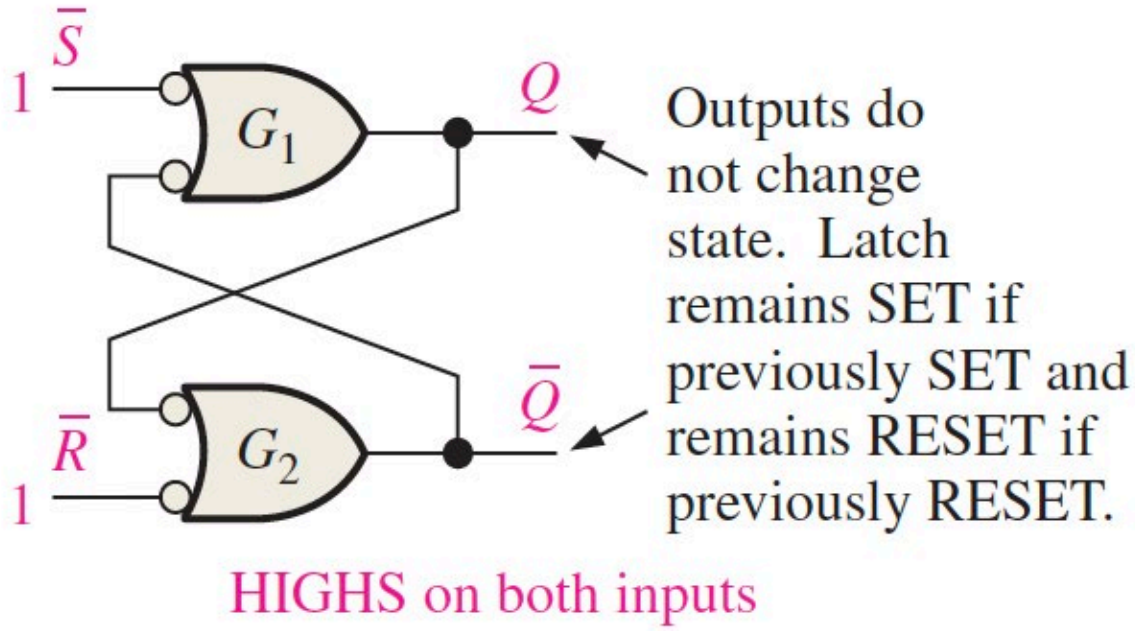

(c) No-change condition

$\bar{S} - \bar{R}$ Latch : Invalid Condition

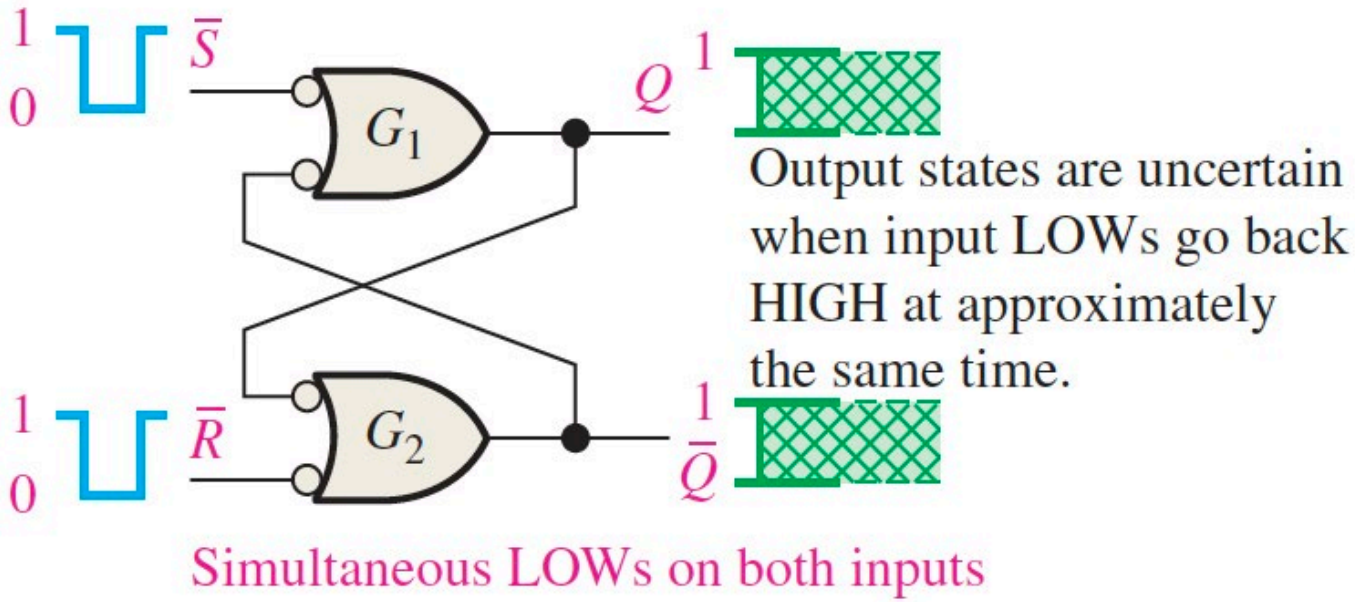

(d) Invalid condition

$\bar{S} - \bar{R}$ Latch : Truth Table

TABLE 7–1

Truth table for an active-LOW input $\overline{S}$-$\overline{R}$ latch.

Inputs		Outputs		
$\bar{S}$	$\bar{R}$	Q	$\bar{Q}$	**Comments**
1	1	NC	NC	No change. Latch remains in present state.
0	1	1	0	Latch SET.
1	0	0	1	Latch RESET.
0	0	1	1	Invalid condition

$\bar{S} - \bar{R}$ Latch : Symbol

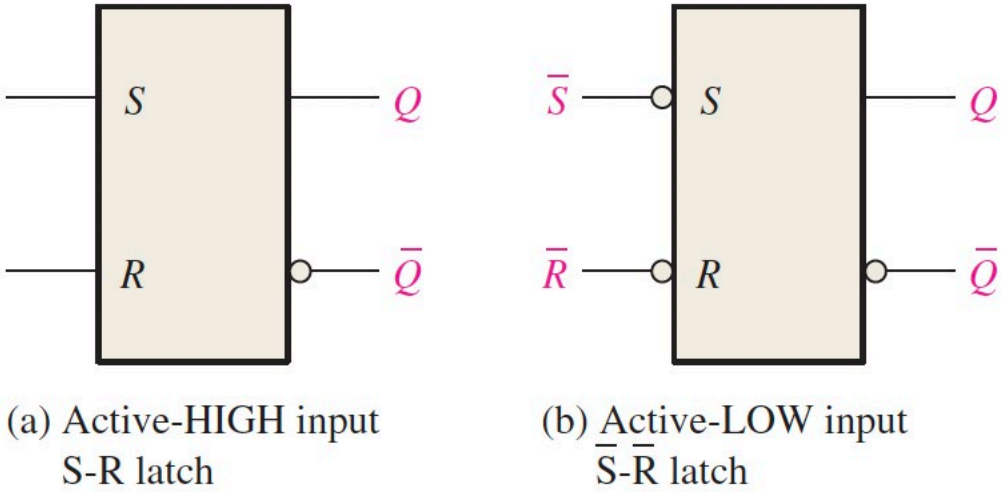

Logic symbols for the S-R and $\bar{S}$-$\bar{R}$ latch.

If the $\overline{S}$ and $\overline{R}$ waveforms in Figure 7–5(a) are applied to the inputs of the latch in Figure 7–4(b), determine the waveform that will be observed on the Q output. Assume that Q is initially LOW.

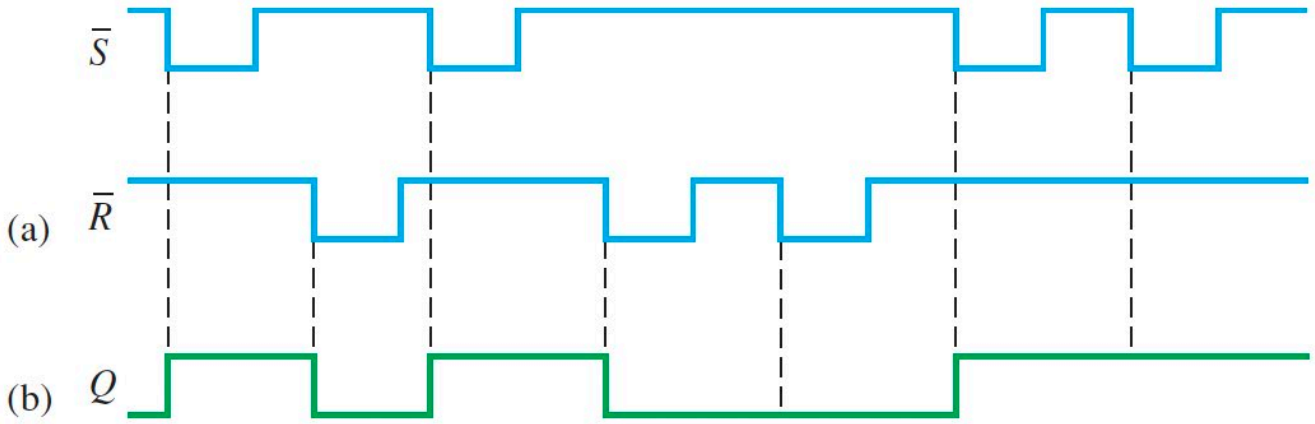

FIGURE 7–5

S-R Latch : Characteristics

Excitation inputs S	R	Present state Q	Next state Q^*	
0	0	0	0	No change
0	0	1	1	
0	1	0	0	Reset
0	1	1	0	
1	0	0	1	Set
1	0	1	1	
1	1	0	×	Not allowed
1	1	1	×	

(a)

(a) Excitation table.

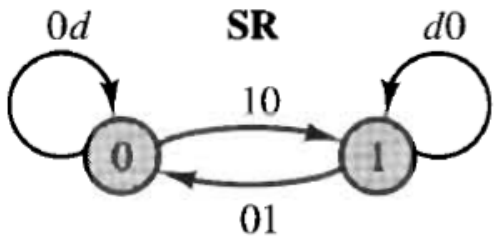

(b)

(b) State diagram.

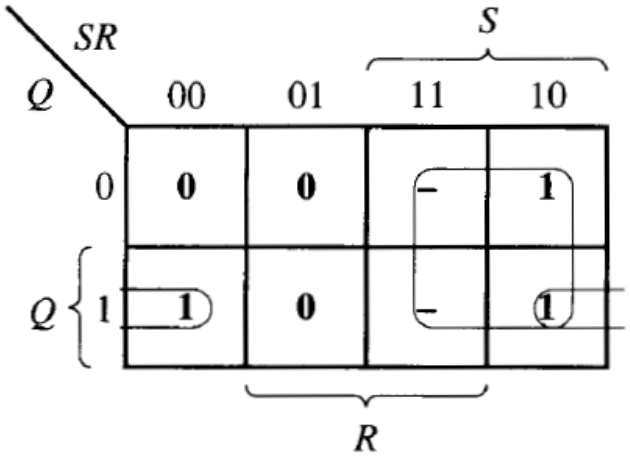

(c)

(c) K-map of latch output Q^*.

the *characteristic equation* of the SR latch:

$$Q^* = S + \bar{R}Q$$

The Latch as a Contact-Bounce Eliminator

A good example of an application of an $\overline{S}$-$\overline{R}$ latch is in the elimination of mechanical switch contact "bounce." When the pole of a switch strikes the contact upon switch closure, it physically vibrates or bounces several times before finally making a solid contact. Although these bounces are very short in duration, they produce voltage spikes that are often not acceptable in a digital system. This situation is illustrated in Figure 7–6(a).

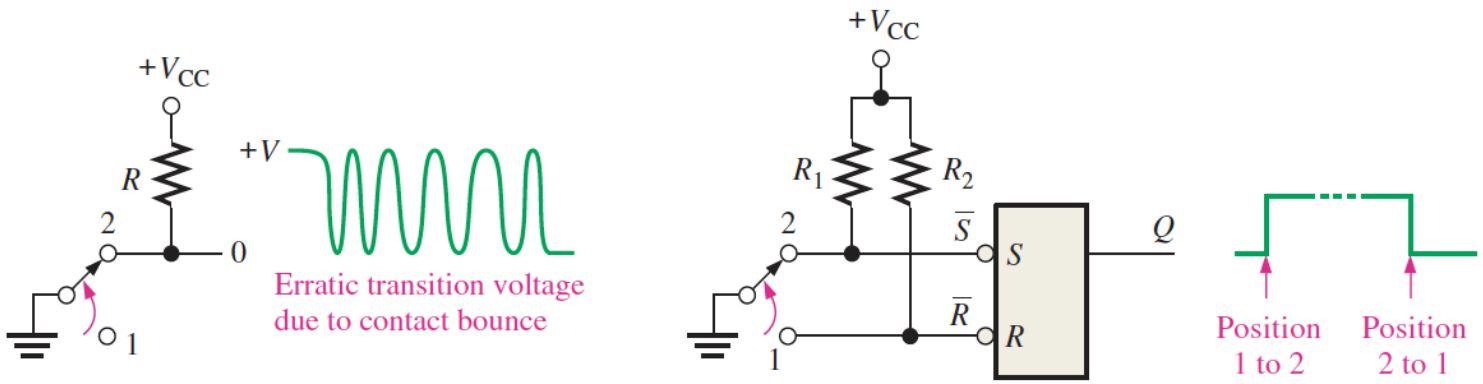

(a) Switch contact bounce

(b) Contact-bounce eliminator circuit

FIGURE 7–6 The $\overline{S}$-$\overline{R}$ latch used to eliminate switch contact bounce.

The Latch as a Contact-Bounce Eliminator

An $\overline{S}$-$\overline{R}$ latch can be used to eliminate the effects of switch bounce as shown in Figure 7–6(b). The switch is normally in position 1, keeping the $\overline{R}$ input LOW and the latch RESET. When the switch is thrown to position 2, $\overline{R}$ goes HIGH because of the pull-up resistor to V_{CC}, and $\overline{S}$ goes LOW on the first contact. Although $\overline{S}$ remains LOW for only a very short time before the switch bounces, this is sufficient to set the latch. Any further voltage spikes on the $\overline{S}$ input due to switch bounce do not affect the latch, and it remains SET. Notice that the Q output of the latch provides a clean transition from LOW to HIGH, thus eliminating the voltage spikes caused by contact bounce. Similarly, a clean transition from HIGH to LOW is made when the switch is thrown back to position 1.

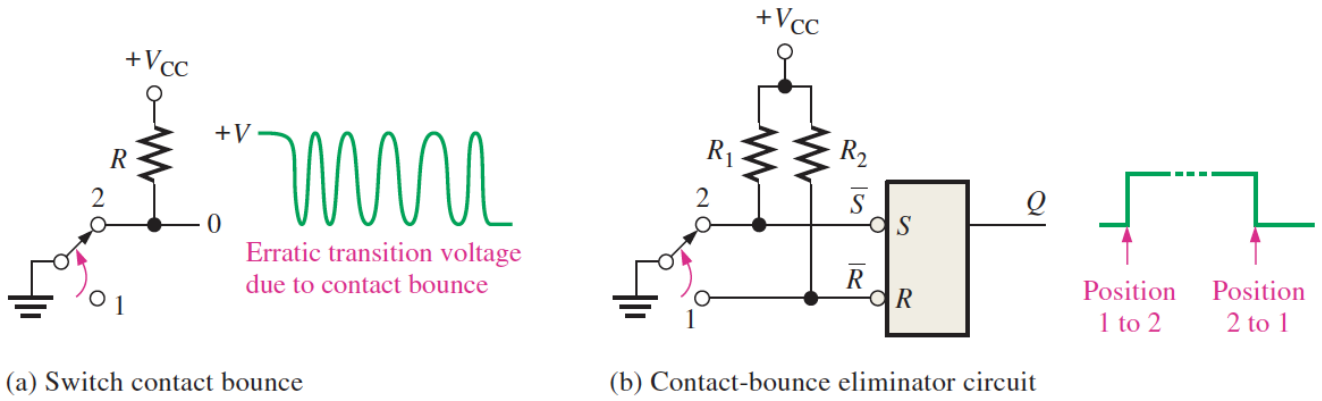

FIGURE 7–6 The $\overline{S}$-$\overline{R}$ latch used to eliminate switch contact bounce.

The Gated S-R Latch

- A gated latch requires an enable input, EN (sometimes G)
- As long as EN remains HIGH, the output is controlled by the state of the S and R inputs.
- The gated latch is a level-sensitive device.
- The invalid state occurs when both S and R are simultaneously HIGH and EN is also HIGH.

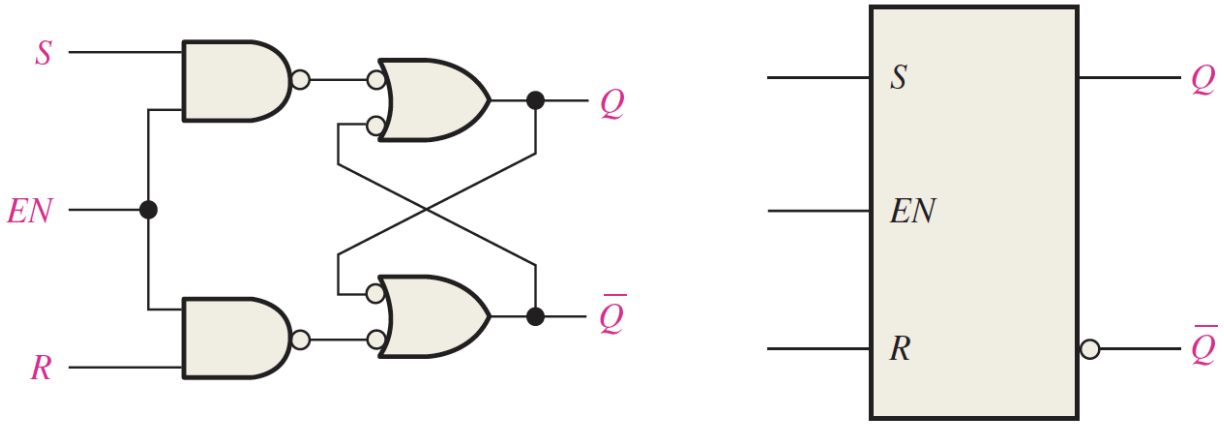

(a) Logic diagram (b) Logic symbol

The Gated S-R Latch : Timing Diagram

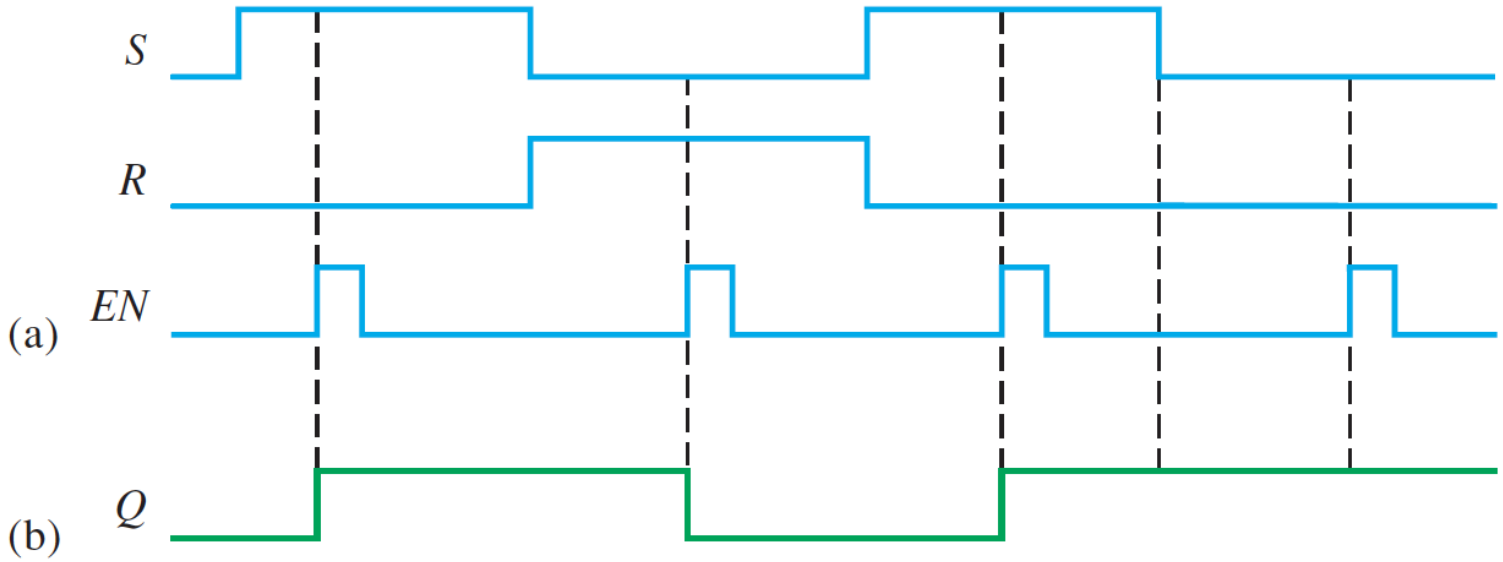

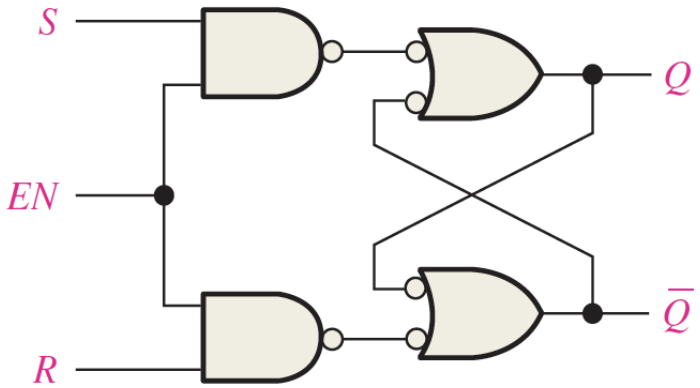

The Gated D Latch

- D latch has only one input in addition to EN.
- This input is called the D (data) input.
- While EN input is HIGH
  - When the D input is HIGH, the latch will set.
  - When the D input is LOW, the latch will reset.
- Stated another way, the output Q follows the input D when EN is HIGH.

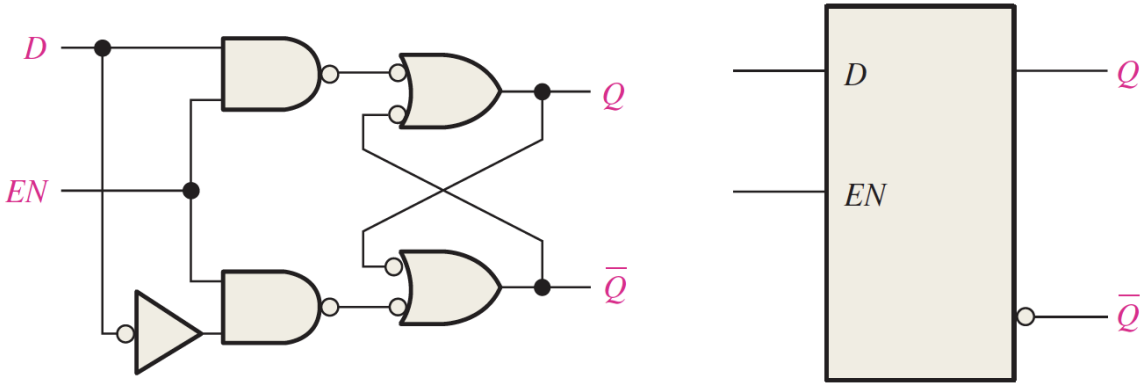

(a) Logic diagram (b) Logic symbol

The Gated D Latch : Timing Diagram

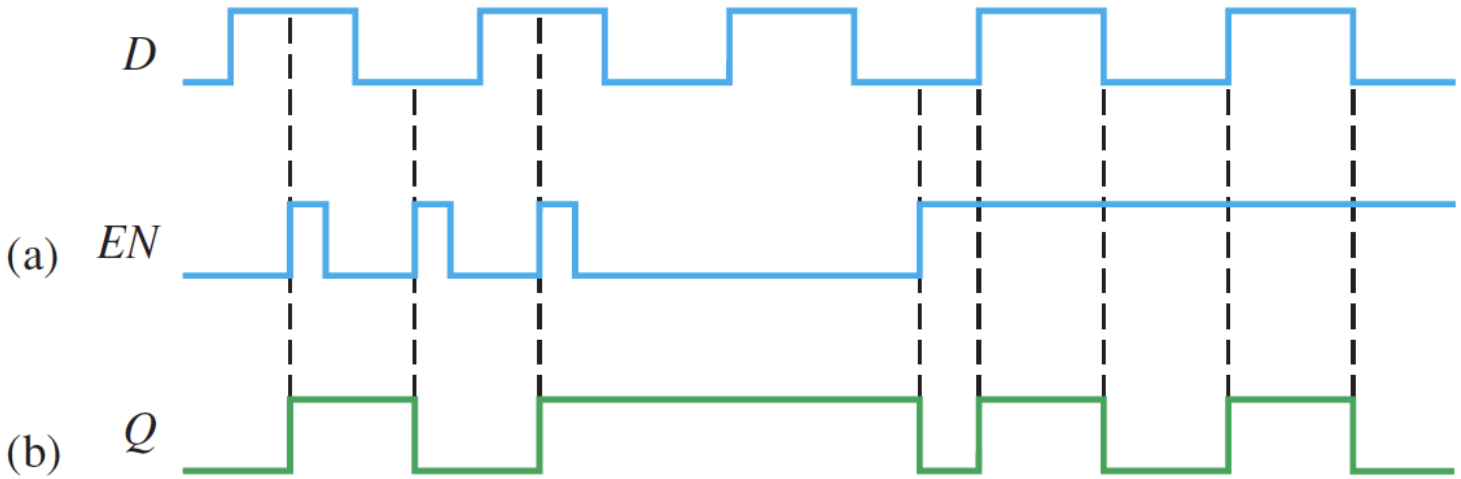

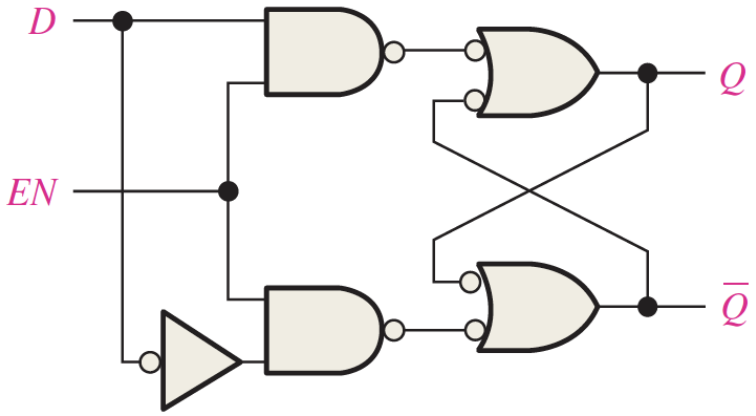

2. Flip-Flops

Flip-Flops

- Flip-flops are *synchronous* bistable devices, also known as bistable multivibrators.
- The term synchronous means that the output changes state only at a specified point on the triggering input called the *clock* (CLK), which is a control input, C;
- Changes in the output occur in synchronization with the clock.
- Flip-flops are edge-triggered or edge-sensitive whereas gated latches are level-sensitive.

Edge-triggered flip-flop

- Changes state either at the positive edge (rising edge) or at the negative edge (falling edge) of the clock pulse.
- Can be either positive edge-triggered (no bubble) or negative edge-triggered (bubble).
- An edge-triggered flip-flop can be identified by the small triangle inside the block at the clock (C) input.
- This triangle is called the dynamic input indicator.

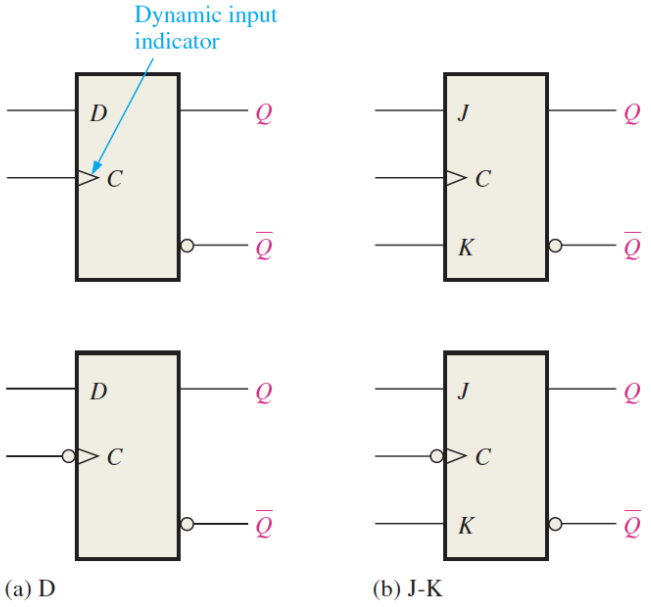

FIGURE 7–13 Edge-triggered flip-flop logic symbols (top: positive edge-triggered; bottom: negative edge-triggered).

D Flip-Flop

- The D input of the D flip-flop is a synchronous input because data on the input are transferred to the flip-flop's output only on the triggering edge of the clock pulse.
- When D is HIGH, the Q output goes HIGH on the triggering edge of the clock pulse, and the flip-flop is SET.
- When D is LOW, the Q output goes LOW on the triggering edge of the clock pulse, and the flip-flop is RESET.

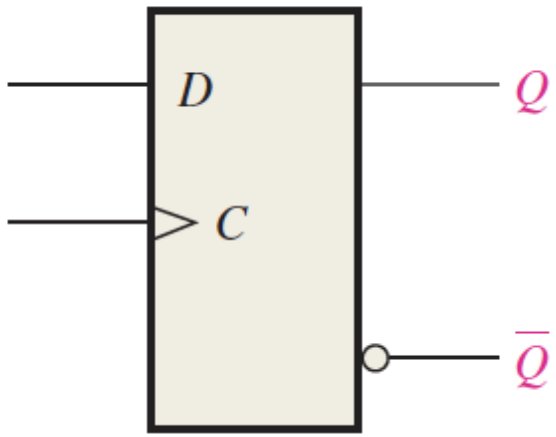

D Flip-Flop : Operation

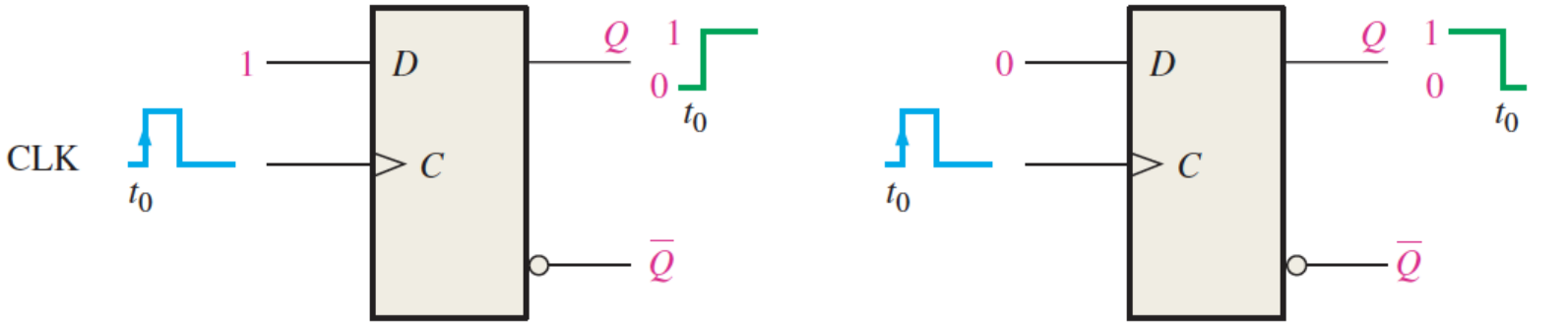

(a) $D = 1$ flip-flop SETS on positive clock edge. (If already SET, it remains SET.)

(b) $D = 0$ flip-flop RESETS on positive clock edge. (If already RESET, it remains RESET.)

FIGURE 7–14 Operation of a positive edge-triggered D flip-flop.

TABLE 7–2

Truth table for a positive edge-triggered D flip-flop.

Inputs		Outputs		
D	CLK	Q	$\overline{Q}$	Comments
0	↑	0	1	RESET
1	↑	1	0	SET

↑ = clock transition LOW to HIGH

What does the truth table for a negative edge-triggered D-FF look like?

D Flip-Flop : Timing Diagram

Assume that the positive edge-triggered flip-flop is initially RESET.

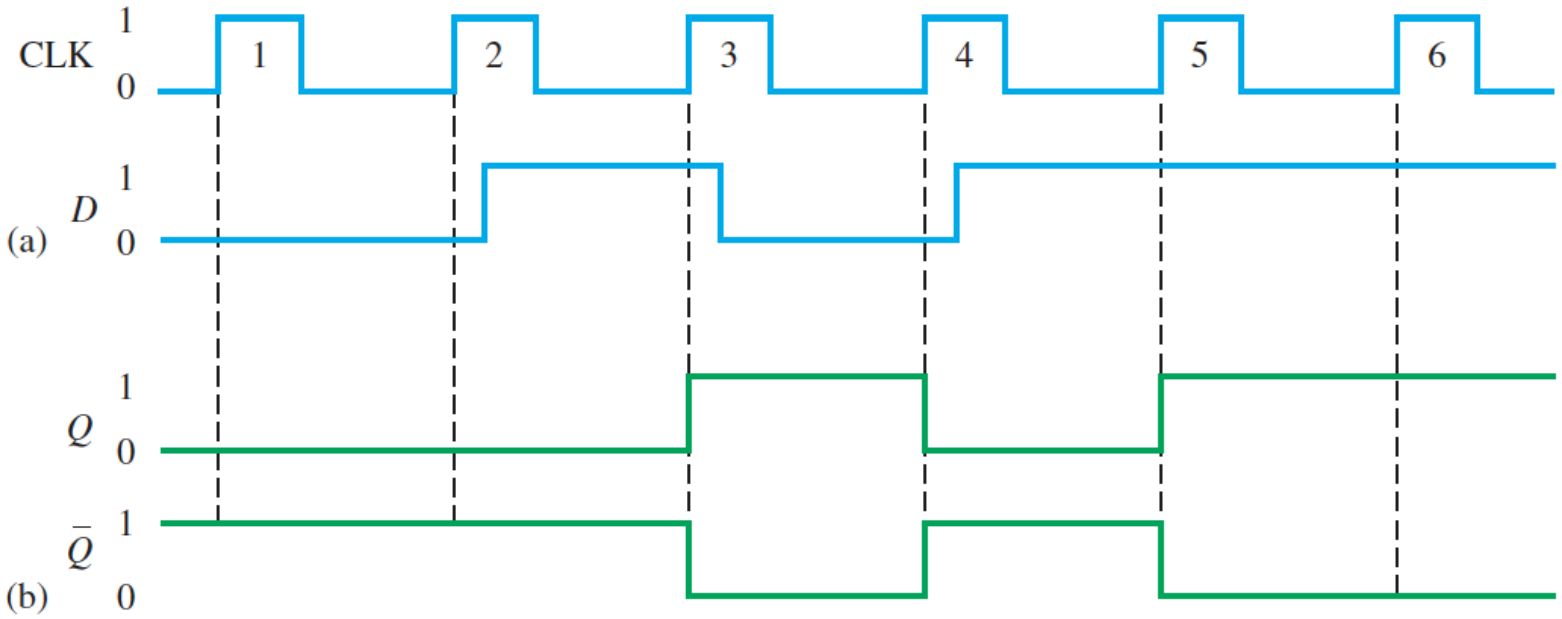

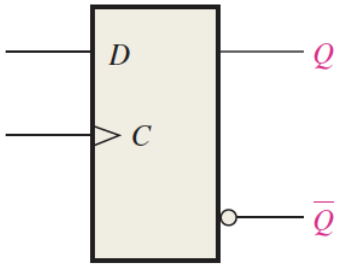

TABLE 7–2

Truth table for a positive edge-triggered D flip-flop.

Inputs		Outputs		
D	CLK	*Q*	$\overline{Q}$	Comments
0	↑	0	1	RESET
1	↑	1	0	SET

↑ = clock transition LOW to HIGH

JK Flip-Flop

- The J and K inputs of the JK-FF are synchronous inputs because data on these inputs are transferred to the flip-flop's output only on the triggering edge of the clock pulse.
- When J is HIGH and K is LOW, the Q output goes HIGH on the triggering edge of the clock pulse, and the flip-flop is SET.
- When J is LOW and K is HIGH, the Q output goes LOW on the triggering edge of the clock pulse, and the flip-flop is RESET.
- When both J and K are LOW, the output does not change from its prior state.
- When J and K are both HIGH, the flip-flop changes state. This called the toggle mode.

TABLE 7–3

Truth table for a positive edge-triggered J-K flip-flop.

Inputs			Outputs		
J	K	CLK	Q	$\overline{Q}$	Comments
0	0	↑	Q_0	$\overline{Q}_0$	No change
0	1	↑	0	1	RESET
1	0	↑	1	0	SET
1	1	↑	$\overline{Q}_0$	Q_0	Toggle

↑ = clock transition LOW to HIGH

Q_0 = output level prior to clock transition

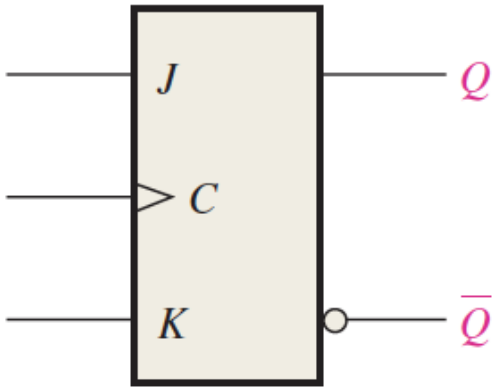

JK Flip-Flop : Operation

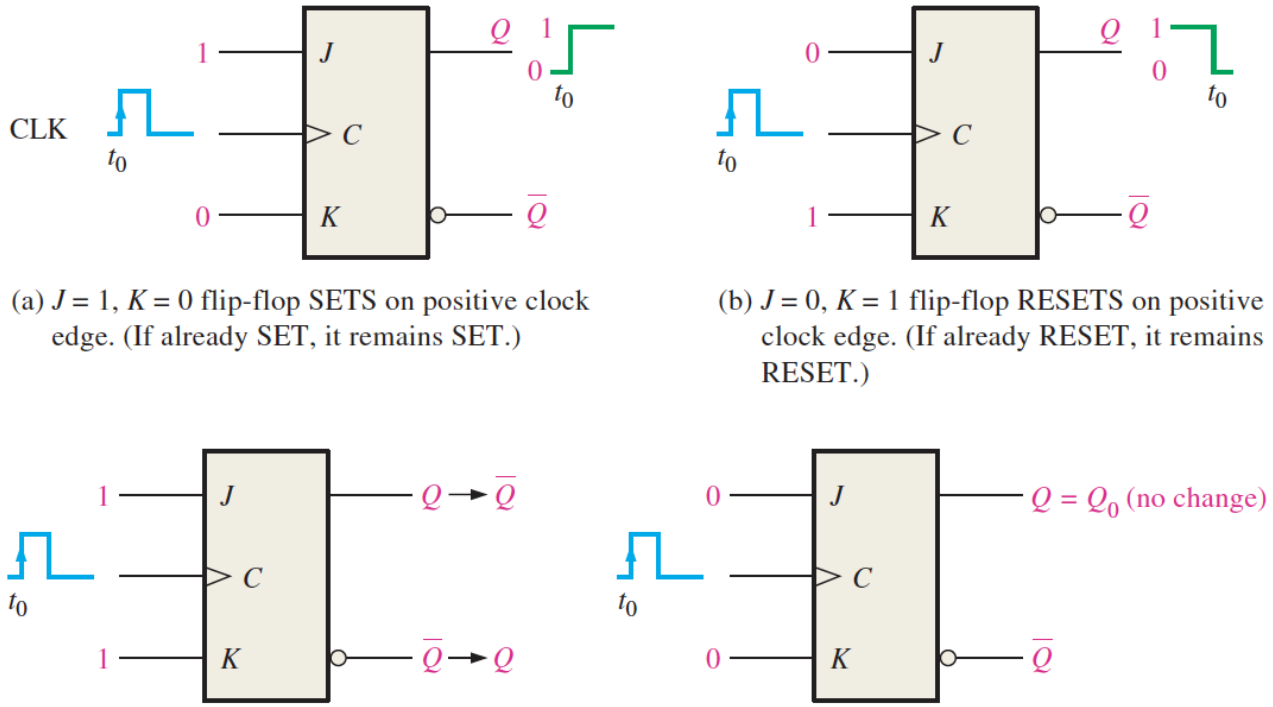

(a) $J = 1$, $K = 0$ flip-flop SETS on positive clock edge. (If already SET, it remains SET.)

(b) $J = 0$, $K = 1$ flip-flop RESETS on positive clock edge. (If already RESET, it remains RESET.)

(c) $J = 1$, $K = 1$ flip-flop changes state (toggle).

(d) $J = 0$, $K = 0$ flip-flop does not change. (If SET, it remains SET; if RESET, it remains RESET.)

FIGURE 7–17 Operation of a positive edge-triggered J-K flip-flop.

TABLE 7–3

Truth table for a positive edge-triggered J-K flip-flop.

Inputs			Outputs		
J	K	CLK	Q	$\overline{Q}$	Comments
0	0	↑	Q_0	$\overline{Q}_0$	No change
0	1	↑	0	1	RESET
1	0	↑	1	0	SET
1	1	↑	$\overline{Q}_0$	Q_0	Toggle

↑ = clock transition LOW to HIGH

Q_0 = output level prior to clock transition

JK Flip-Flop : Timing Diagram

Assume that the positive edge-triggered flip-flop is initially RESET.

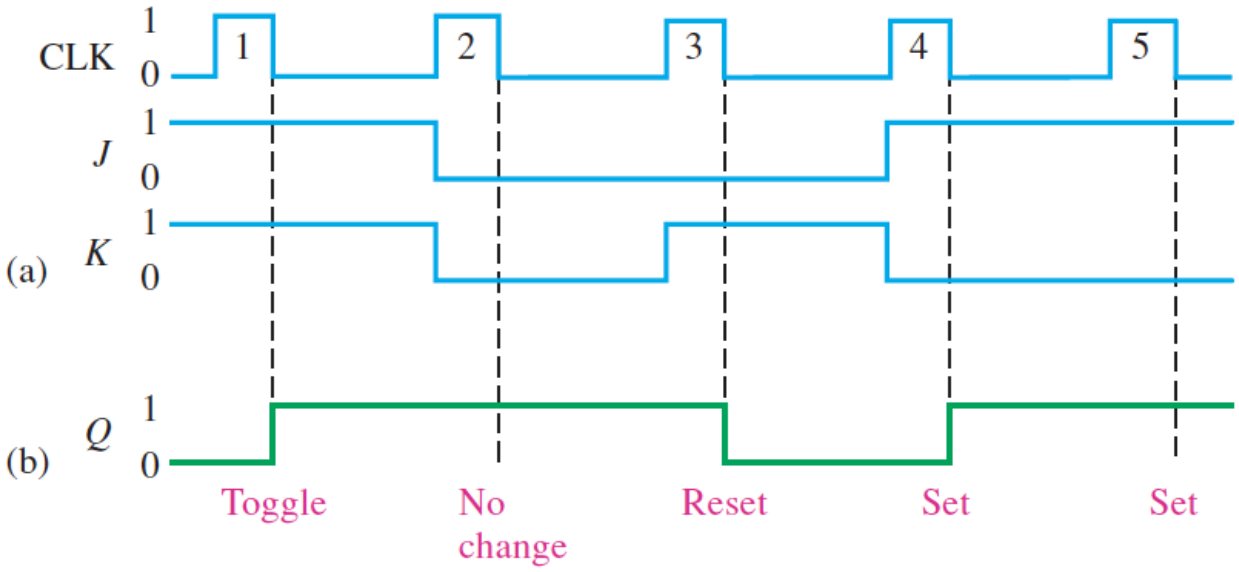

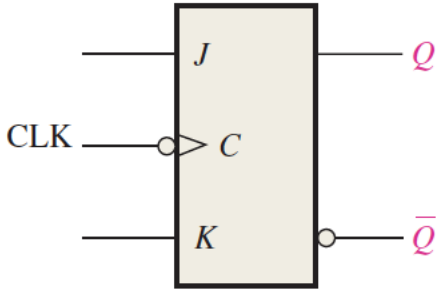

TABLE 7–3

Truth table for a positive edge-triggered J-K flip-flop.

Inputs			Outputs		
J	K	CLK	Q	$\overline{Q}$	Comments
0	0	↑	Q_0	$\overline{Q}_0$	No change
0	1	↑	0	1	RESET
1	0	↑	1	0	SET
1	1	↑	$\overline{Q}_0$	Q_0	Toggle

↑ = clock transition LOW to HIGH
Q_0 = output level prior to clock transition

Edge-Triggered Operation : D-FF

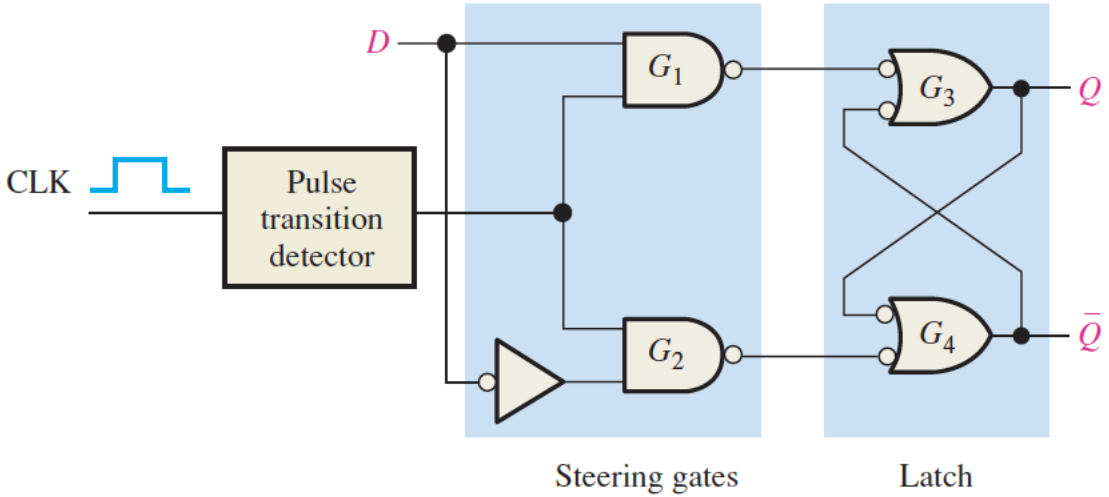

(a) A simplified logic diagram for a positive edge-triggered D flip-flop

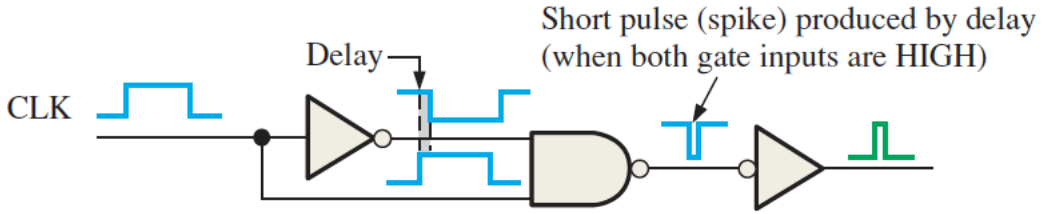

(b) A type of pulse transition detector

FIGURE 7–19 Edge triggering.

Asynchronous Preset and Clear Inputs

- Preset (PRE) or direct set (SD)
- Clear (CLR), or direct reset (RD)

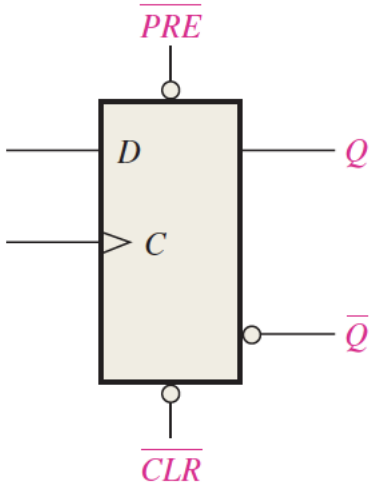

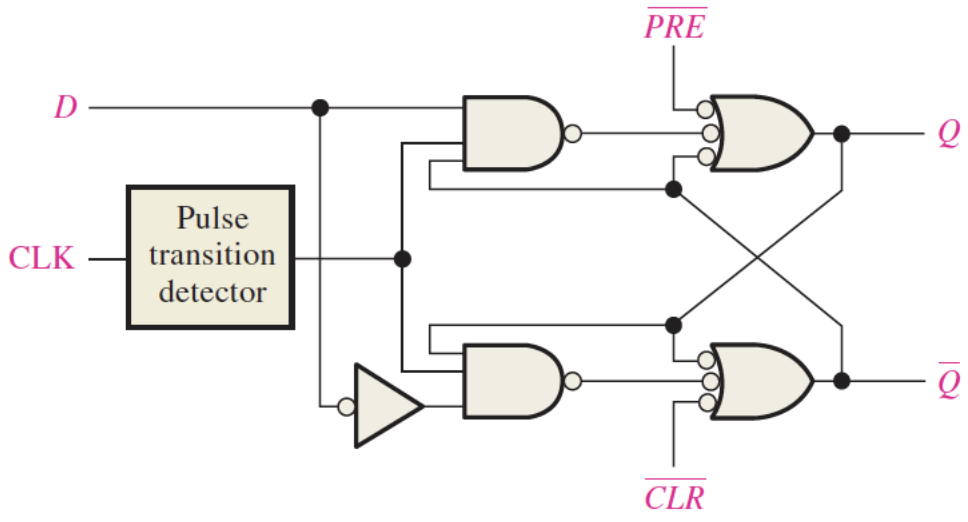

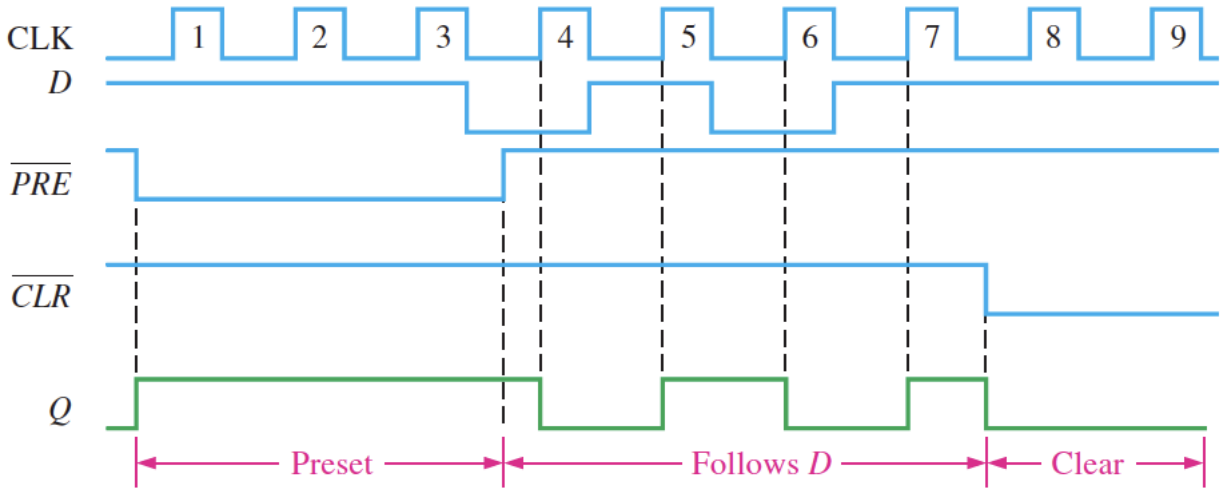

Asynchronous Preset and Clear Inputs

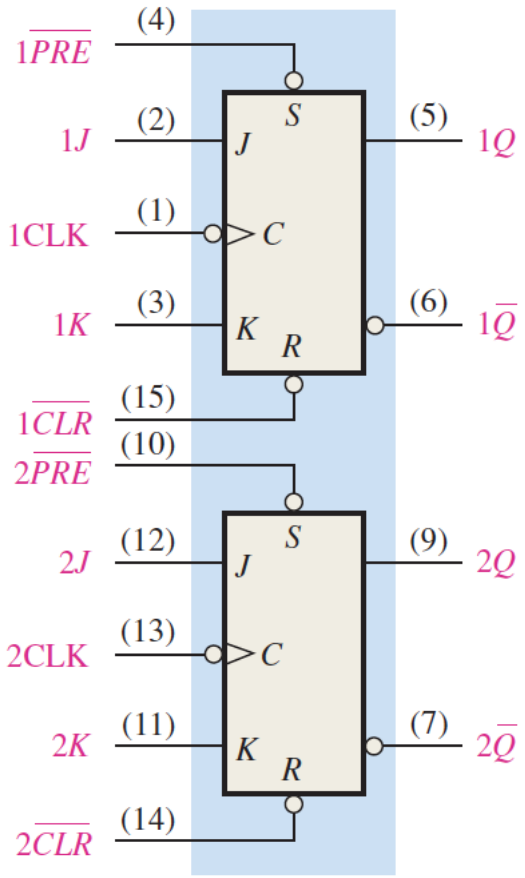

(a) Individual logic symbols

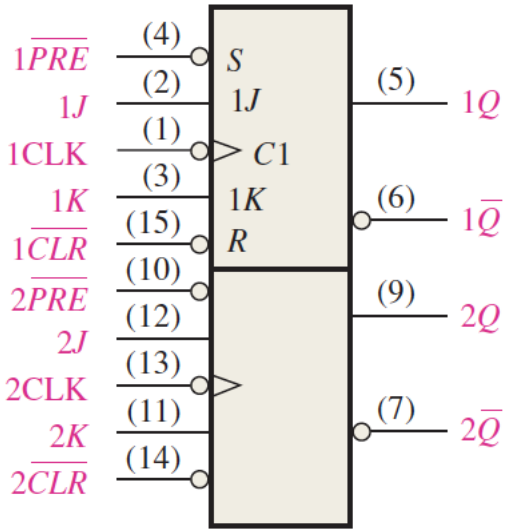

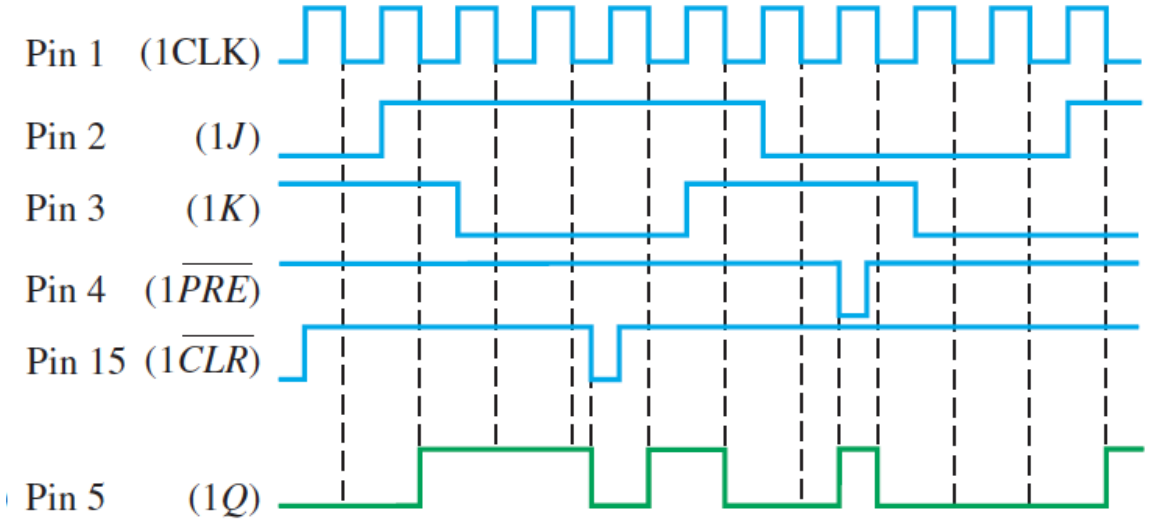

7476 – Dual JK Flip-Flop with Preset and Clear

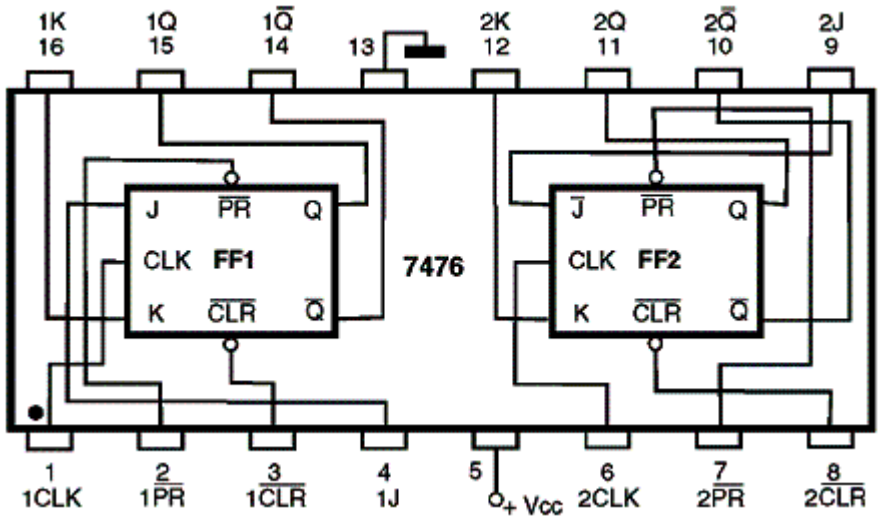

$\overline{PRESET}$	$\overline{CLEAR}$	J	K	C	Q	$\overline{Q}$	
0	1	X	X	X	1	0	Set State
1	0	X	X	X	0	1	Reset State
0	0	X	X	X	1	1	Not allowed State
1	1	0	1	↓	0	1	
1	1	1	0	↓	1	0	
1	1	0	0	X	Q	$\overline{Q}$	
1	1	1	1	↓	Toggle		

Parallel Data Storage / Basic Register

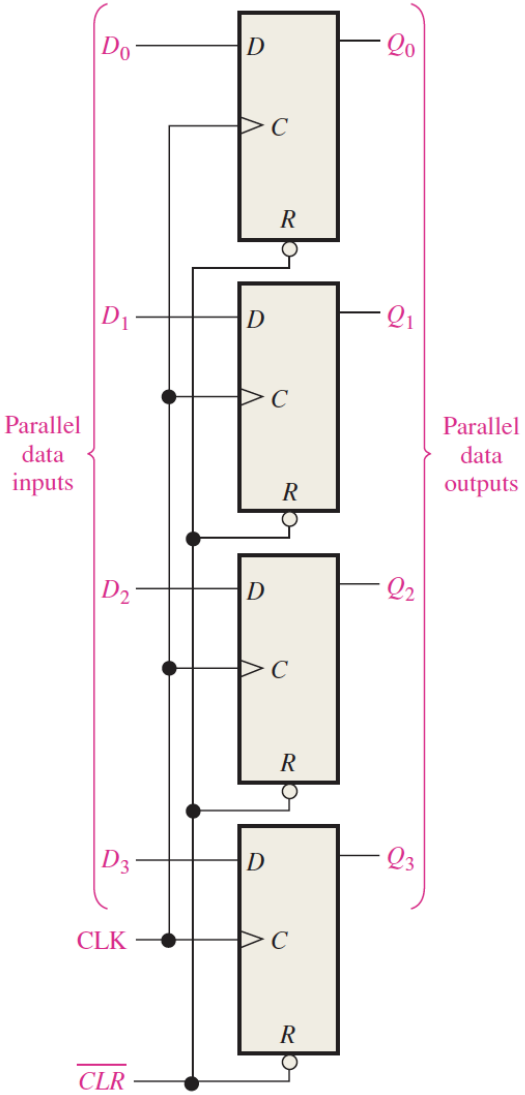

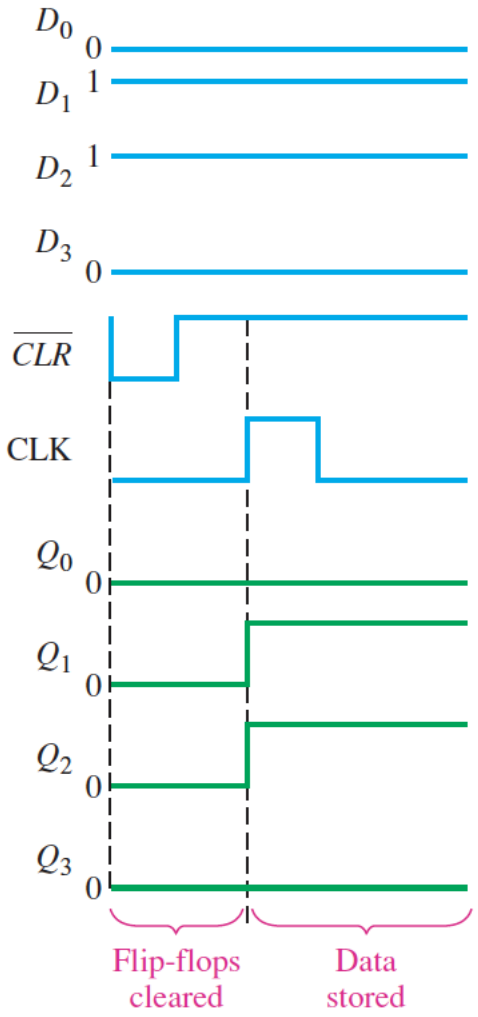

Frequency Division

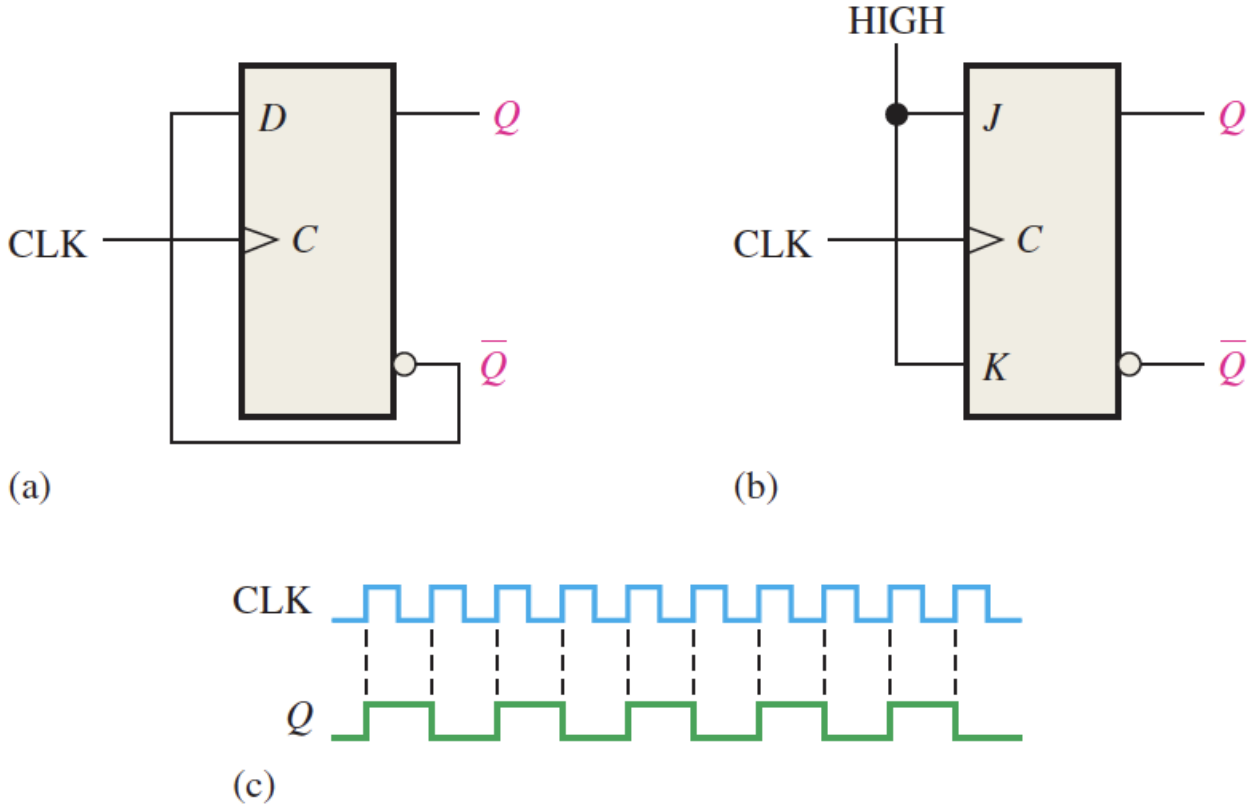

FIGURE 7–36 The D flip-flop and J-K flip-flop as a divide-by-2 device. *Q* is one-half the frequency of CLK. Open file F07-36 and verify the operation.

Frequency Division

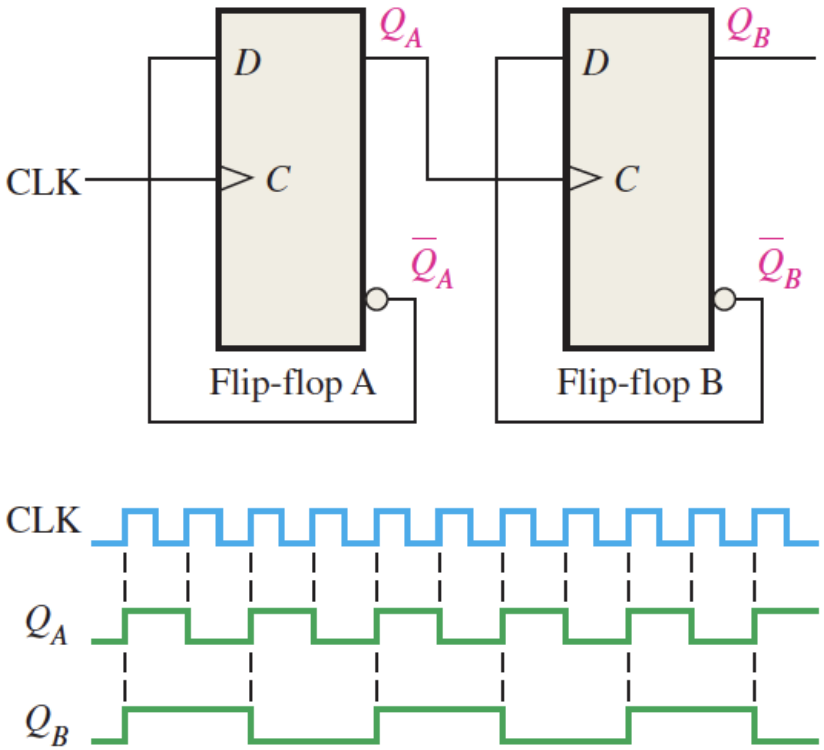

FIGURE 7–37 Example of two D flip-flops used to divide the clock frequency by 4. Q_A is one-half and Q_B is one-fourth the frequency of CLK. Open file F07-37 and verify the operation.

Counting

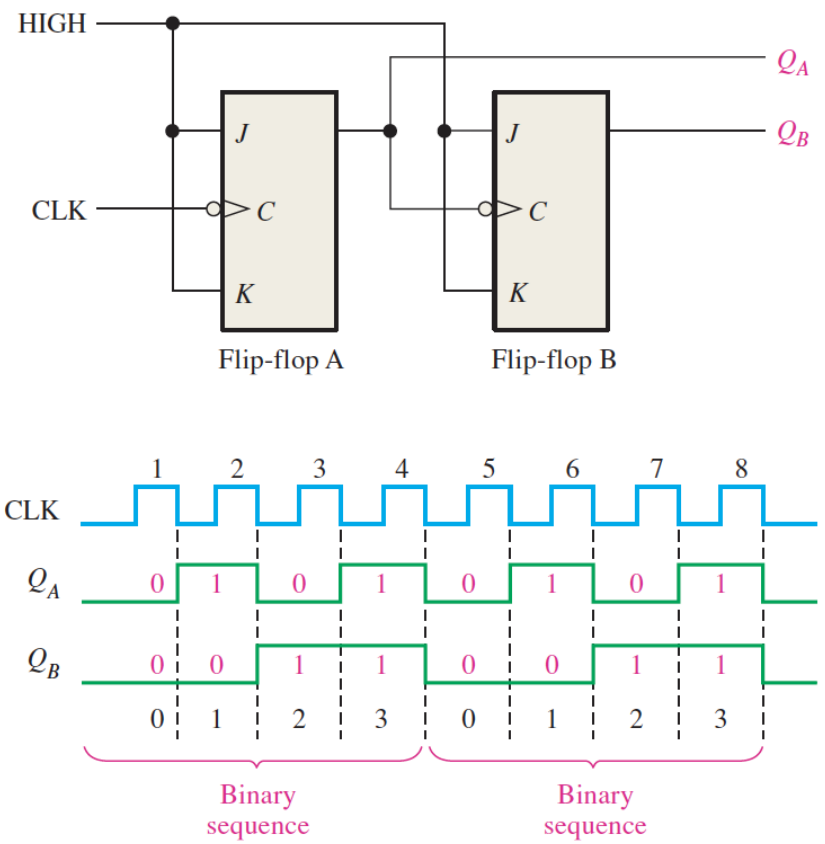

FIGURE 7–40 J-K flip-flops used to generate a binary count sequence (00, 01, 10, 11). Two repetitions are shown.

T Flip-Flop (Trigger/Toggle)

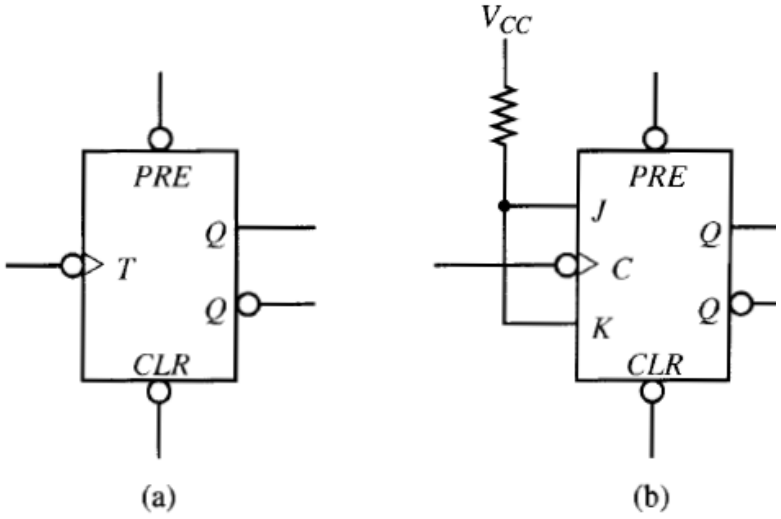

Figure 6.33 Negative-edge-triggered T flip-flop. **(a)** Logic symbol. **(b)** Functional equivalent.

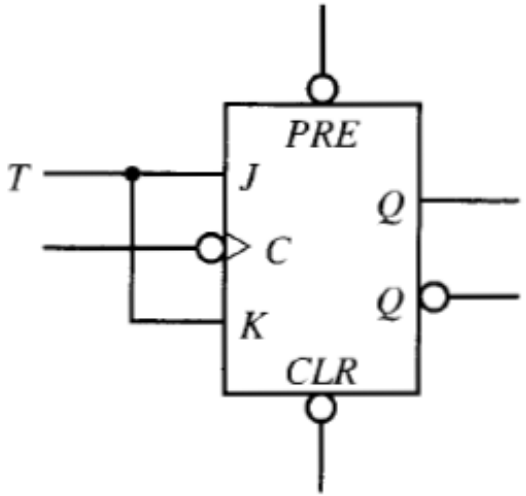

$$Q^* = \bar{Q}$$

T	Q	Q^*	
↓	0	1	Toggle
↓	1	0	Toggle

(a)

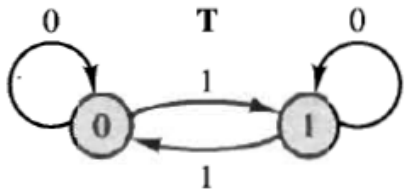

Figure 6.34 Edge-triggered T flip-flop characteristics. **(a)** Excitation table. **(b)** State diagram.

TABLE 7–3

Truth table for a positive edge-triggered J-K flip-flop.

Inputs			Outputs		
J	K	CLK	Q	$\overline{Q}$	Comments
0	0	↑	Q_0	$\overline{Q}_0$	No change
0	1	↑	0	1	RESET
1	0	↑	1	0	SET
1	1	↑	$\overline{Q}_0$	Q_0	Toggle

↑ = clock transition LOW to HIGH
Q_0 = output level prior to clock transition

T Flip-Flop : Timing Diagram

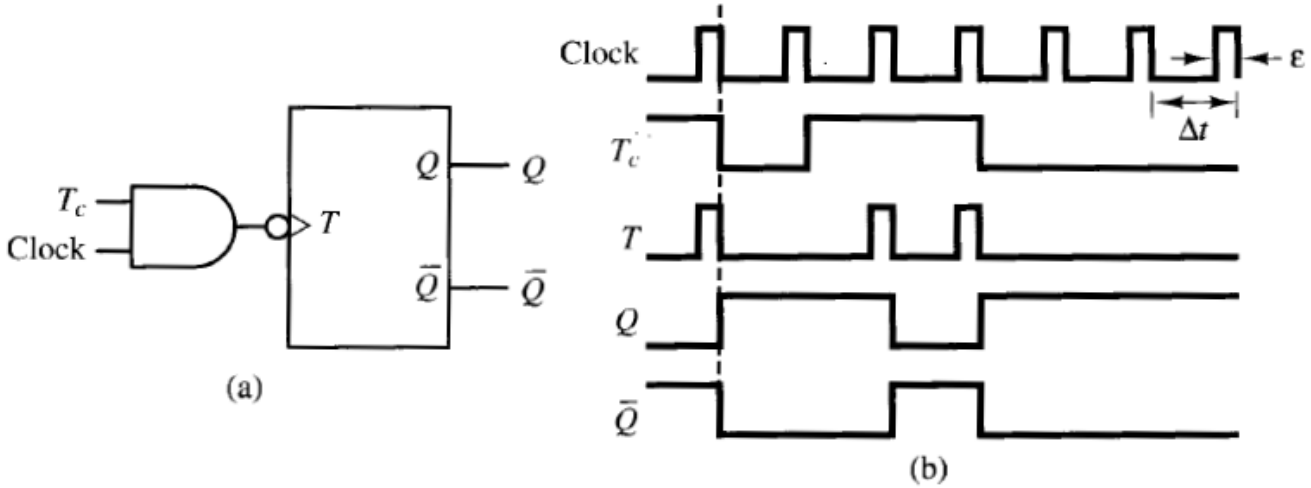

Figure 6.37 The clocked T flip-flop. **(a)** Logic symbol. **(b)** Timing diagram.

T Flip-Flop : Timing Diagram

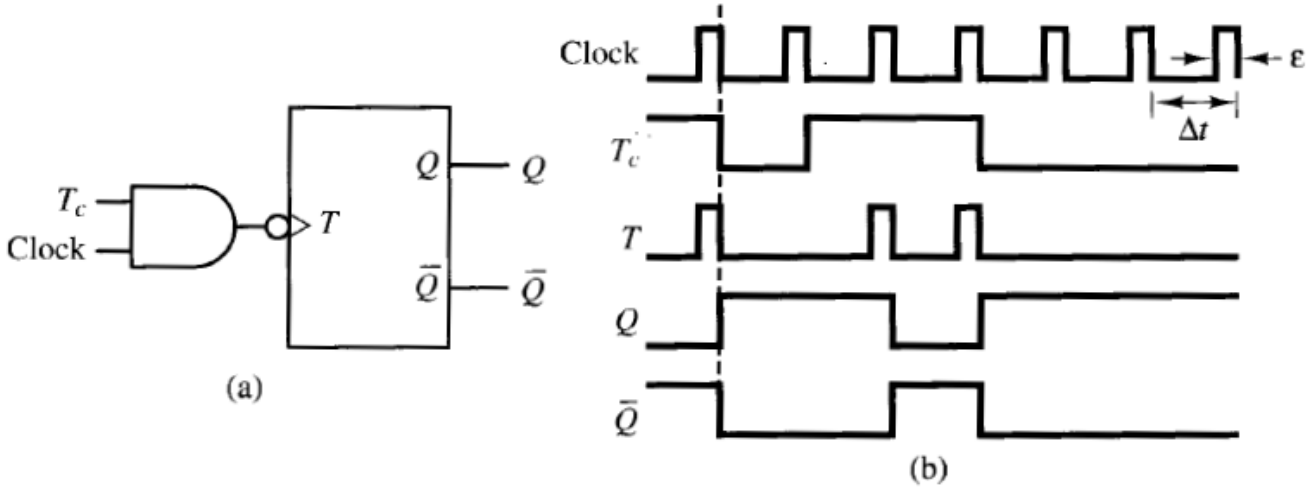

Figure 6.37 The clocked T flip-flop. **(a)** Logic symbol. **(b)** Timing diagram.

THANK YOU